B-TECH AV MOUNTS

SYSTEM X

BT8343

CURVED UNIVERSAL CEILING MOUNTED VIDEOWALL MOUNTING SYSTEM

INSTALLATION GUIDE

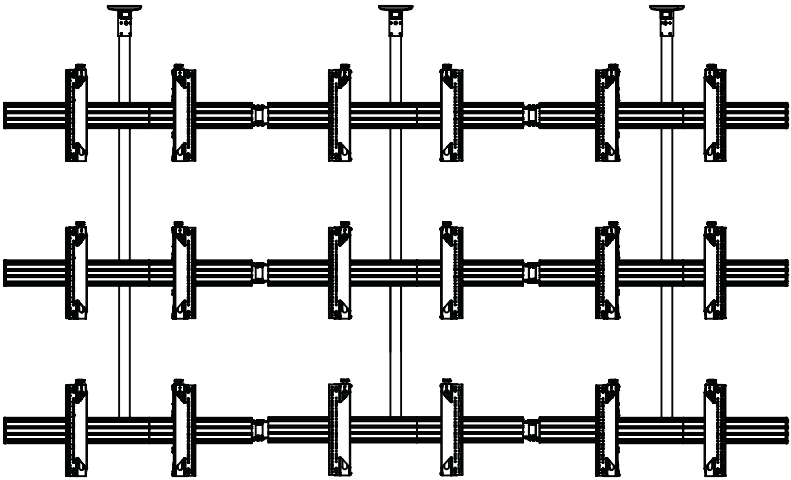

SPECIFICATIONS

- Recommended screen size: 32"- 75"
- Max weight per screen: 50kg (110lbs)
- Suitable for landscape or portrait mounting
- Angle adjustment range: +/- 45° between screens
- Safety screws help prevent unauthorised removal of screens
- All mounting hardware included

Note: This assembly manual covers different installations. Some parts or procedures shown may not be required for installation.

Please refer to page 5 for VESA® fixings

75" 190CM

50KG PER SCREEN

CONTENTS

Installation Safety Notes....2
Parts List....4
Typical Installation....6
Installation Instructions....7
Product Dimensions....18
B-Tech Contact Details....20

INSTALLATION & OPERATING SAFETY INSTRUCTIONS

CAUTION: This mount is intended for use only with the maximum weights indicated. Use with equipment heavier than the maximum indicated may result in instability causing possible injury.

Do not attempt to install this product until all installation / operating instructions and warnings have been read and properly understood. *Please keep these instructions safe for future reference.*
Please check carefully to make sure there are no missing or defective parts - defective parts must never be used.
B-Tech AV Mounts, its distributors and dealers are not liable or responsible for damage or injury caused by improper installation, improper use or failure to observe these safety instructions. In such cases, all guarantees will expire.
Check with the place of purchase for information on any guarantees, repairs or replacements of this product.

General

B-Tech AV Mounts recommends that a professional AV installer or other suitably qualified person install this product.
Great care must always be taken during installation as most AV equipment is of a fragile nature, possibly heavy and easily damaged if dropped.
If you do not fully understand the instructions or are not sure how to install this product safely, then please consult a professional for advice and/or to install this product for you. Failure to mount this product correctly may cause serious injury or death both during installation and at any time thereafter.
Do not mount any AV equipment that exceeds the specific weight limit of the product you are installing.
This weight limit will be clearly stated on each product and its packaging and will vary from product to product.

Product location

Please pay careful attention to where this product is located. Check load capacity of the ceiling prior to installation to ensure that it can support the combined weight of the equipment and hardware, some surfaces are not suitable for installation.
Warning! Secure to a solid fixture, stability can be impaired if attaching to any unsecured surface or furniture.
Designed for indoor use, this mount is suitable for public or home installation. If located in a public or frequently populated area ensure that the product is out of the immediate reach of people. f any AV equipment is to be suspended over the likely path or location of people then great care should be taken to secure all parts of the installation from falling.
When drilling holes it is essential to avoid contact with electrical cables and water or gas pipes contained within.
Use of a good quality live wire detector and hidden object locator is therefore recommended.
Only drill into structures when you are sure it is safe to do so.

Fixing hardware

It is highly recommended that all fixing screws be used where supplied and that the purpose of all other fixing hardware is fully understood. In some cases more AV equipment fixing hardware will be supplied to accommodate different models of equipment and set up configurations. The installer must be satisfied that any supplied fixing hardware is suitable for each specific installation. The fixing kit supplied with the product may not be suitable for all walls.
If any fixing screws or included hardware are deemed not sufficient for a safe installation then please consult a professional or your local hardware store.

Hazard limitation

When routing cables take advantage of any built in cable management features that the product might provide and ensure that all cables are tidy and secure. Check to see that any moving aspect of the product can do so unhindered by any cabling. Some products have moving parts and the potential to cause injury through the crushing or trapping of fingers or other body parts. Particular attention to the nature of moving parts is required especially when assembling installing and adjusting during set up. Immediately after installation double-check that the work done is safe and secure. Double-check all necessary fixings are present and are of ample tightness.

Operating & Maintenance

It is recommended that periodic inspections of the product and its fixing points are made as frequently as possible (no more than 6 months apart) to ensure that safety is maintained. B-Tech AV Mounts recommends that a suitably qualified person is used for the removal of this product. Please dispose of the product carefully and with consideration to the environment.
If in doubt consult a professional AV installer or other suitably qualified person.

CN B-Tech AV Mounts 建议本产品由专业AV安装人员或其他合格人员安装。 B-Tech AV Mounts 及它的代理商、经销商不对由于不恰当的安装而造成的损失或伤害负责。 本产品必须安装在合适的架构上，并仅用于不超过所标示的最大承重。

CS Společnost B-Tech AV Mounts doporučuje provést instalaci tohoto produktu instalátora AV či jinak způsobilé osoby. Společnost B-Tech AV Mounts, její distributoři a prodejci nenesou prostřednictvím odborného odpov ědnost za škody nebo zranění zp ůsobená nevhodnou instalací. Tento výrobek je nutno umístit do vhodné konstrukce a používat jen po uvedenou maximální výšku.

DE B-Tech AV Mounts empfiehlt, dass dieses Produkt durch einen qualifizierten AV-Techniker oder eine andere Person mit geeigneter Qualifikation installiert wird. B-Tech AV Mounts, ihre Distributoren und Händler können nicht für durch fehlerhafte Montage verursachte Beschädigung oder Verletzung haftbar bzw. verantwortlich gemacht werden. Dieses Produkt muss auf eine geeignetem Untergrund montiert werden und darf nur bis zum angegebenen Höchstgewicht verwendet werden.

ES B-Tech AV Mounts recomienda que un instalador de audio y video profesional u otra persona debidamente cualificada instalen este producto. B-Tech AV Mounts, sus distribuidores y concesionarios no se hacen cargo ni se responsabilizan de ningún daño o lesión provocados por una instalación inapropiada. Este producto se debe montar en una estructura adecuada y se debe utilizar soportando solamente hasta el peso máximo indicado.

FR B-Tech AV Mounts recommande de confier l'installation de ce produit à un installateur AV professionnel ou à une autre personne dûment qualifiée. B-Tech AV Mounts, ses distributeurs et ses revendeurs ne sauraient être tenus responsables de tout dégât ou de toute blessure résultant d'une installation incorrecte. Ce produit doit être monté sur un support approprié et utilisé dans la limite du poids maximum indiqué.

IT B-Tech AV Mounts consiglia di affidare l'installazione di questo prodotto a un installatore specializzato o ad altra persona adeguatamente qualificata. B-Tech AV Mounts, i suoi distributori e rivenditori non accettano alcuna responsabilità nei riguardi di eventuali danni o infortuni causati da un'errata installazione. Questo prodotto deve essere fissato a una struttura idonea e utilizzato unicamente sino al peso massimo indicato.

JP B-Tech AV Mounts はAV設置の専門家または適合した知識を備えた人が製品を設置することを推奨します。B-Tech AV Mounts と販売店、取引先はこうした安全指針に従わない場合に随伴される製品の損傷や傷害に対する責任を負いません。場合によって製品が設置されるに適していないところもあるので設置位置に特別な注意を傾けてください。この製品の位置に注意を傾けて設置に適していない壁がいるかを確認してください。指定した重さ制限を超過するAV装備を装着しないでください。

KR B-Tech AV Mounts 는 AV 설치 전문가 또는 적합한 지식을 갖춘 사람이 제품을 설치하도록 권장합니다. B-Tech AV Mounts 와 판매점, 거래처는 이러한 안전 지침을 따르지 않을 경우에 수반될 제품의 손상이나 상해에 대한 책임을 지지 않습니다. 경우에 따라 제품이 설치되기에 적합하지 않은 곳들도 있으므로 설치 위치에 특별한 주의를 기울여 주시기 바랍니다. 제품의 설치 위치에 주의를 기울여 확인하십시오. 지정된 무게 제한을 초과하는 AV 장비를 장착하지 마십시오.

NL B-Tech AV Mounts adviseert om dit product te laten installeren door een professionele AV-installateur of andere hiervoor gekwalificeerde persoon. B-Tech AV Mounts , haar distributeurs en dealers zijn niet aansprakelijk of verantwoordelijk voor schade of letsel die is veroorzaakt door onoordeelkundige installatie. Dit product moet worden gemonteerd aan een geschikte constructie, waarbij het aangegeven maximum gewicht niet mag worden overschreden.

PL Firma B-Tech AV Mounts zaleca, aby ten produkt był instalowany przez profesjonalnych instalatorów AV lub inny odpowiednio przeszkolony personel. Firma B-Tech AV Mounts, jej dystrybutorzy i dealerzy nie ponoszą odpowiedzialności za uszkodzenia lub obrażenia ciała powstałe w wyniku nieprawidowej instalacji. Niniejszy produkt musi być amontowany na odpowiedniej powierzchni, a podczas użytkowania nie wolno przekraczać podanego maksymalnego obciążenia.

PT A B-Tech AV Mounts recomenda que a instalação deste produto seja efectuada por um instalador de AV instalador de AV profissional ou outra pessoa devidamente habilitada. A B-Tech AV Mounts e os seus distribuidores e concessionários não são responsáveis por danos ou lesões causados por uma instalação incorrecta. Este produto tem de ser montado numa estrutura adequada e utilizado somente até ao peso máximo indicado.

RU Компания B-Tech AV Mounts рекомендует, чтобы установка данного изделия производилась инженером по установке аудтио-видеотехники или другим специалистом с соответствующей квалификацией. Компания B-Tech AV Mounts ее дистрибьюторы и дилеры не несут ответственности за повреждения или травмы, полученные в результате неправильной установки.

توصي بي- تك للتجارة الدولية المحدودة بأن شخص محترف فى تركيب ال AV او شخص مؤهل تأهيلا مناسبا لتركيب هذا المنتج. بي- تك للتجارة الدولية، موزعيها والتجار ليست عرضة أو مسؤولة عن الأضرار أو الإصابات الناجمة عن تركيب غير سليم، والاستخدام غير السليم أو عدم مراعاة هذه التعليمات للسلامة. يجب أن يتم تركيب هذا المنتج فى بنية مناسبة ويجب استخدامة فقط لدعم الحد الأقصى للوزن المشار إليه.

BT8343 **PARTS LIST**

PLEASE KEEP THIS FOR FUTURE REFERENCE

Due to the multiple installations available the quantity for each option below is dependent on the mount ordered.

All these components can be moved or carried by manpower. Please be careful to avoid injury when handling these components before & during the installation or when uninstalling the mount.

Ⓐ CEILING MOUNT

BT7822

ITEM	PART NAME	QTY PER PACK
A1	CEILING PLATE	1
A2	M8 x 60mm HEX SOCKET SCREW	1
A3	M8 x 8mm GRUB SCREW	8
A4	CEILING PLATE COVER	2
A5	M8 x 12mm CSK SCREW	1
A6	4AF HEX KEY	1
A7	5AF HEX KEY	1

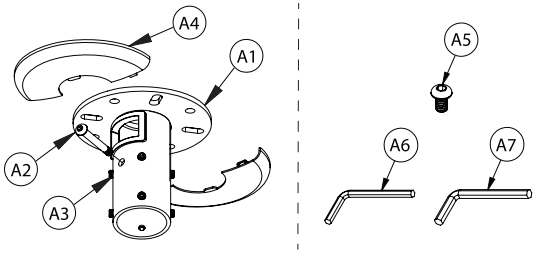

Ⓑ EXTENSION POLE

BT7850-025 Length: 25cm	BT7850-050 Length: 50cm	BT7850-100 Length: 100cm
BT7850-150 Length: 150cm	BT7850-200 Length: 200cm	BT7850-300 Length: 300cm

ITEM	PART NAME	QTY PER PACK
B1	EXTENSION POLE	1
B2	END CAP	1

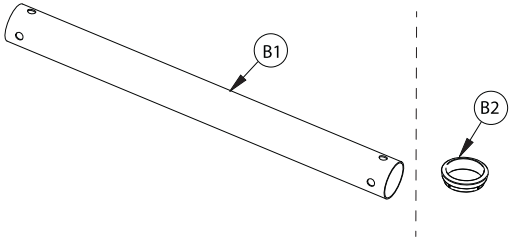

Ⓒ COLLAR

BT7051 / BT7052 / BT7841

ITEM	PART NAME	QTY PER PACK
C1	COLLAR	1
C2	M8 x 15mm GRUB SCREW	4
C3	M8 x 65mm SAFETY BOLT	1
C4	M8 SPRING WASHER	9
C5	COLLAR COVERPLATE (HALF)	2
C6	M8 x 12mm SCREW	8
C7	4AF HEX KEY	1
C8	5AF HEX KEY	1

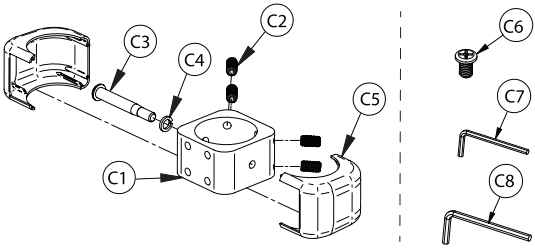

Ⓓ COLLAR FIXING KIT

BT8390-CFK

ITEM	PART NAME	QTY PER PACK
D1	COLLAR FIXING PLATE	1
D2	M8 SLIDING NUT	4
D3	M8 x 12mm CSK SCREW	8
D4	3AF HEX KEY	1

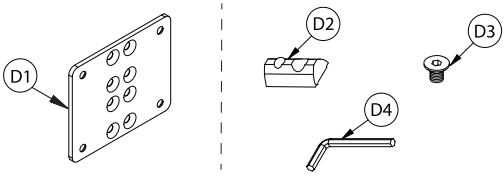

Ⓔ MOUNTING RAIL

BT8390-050 Length: 50cm	BT8390-070 Length: 70cm
BT8390-150 Length: 150cm	BT8390-175 Length: 175cm
BT8390-200 Length: 200cm	BT8390-300 Length: 300cm

ITEM	PART NAME	QTY PER PACK
E1	MOUNTING RAIL	1
E2	END CAP	2

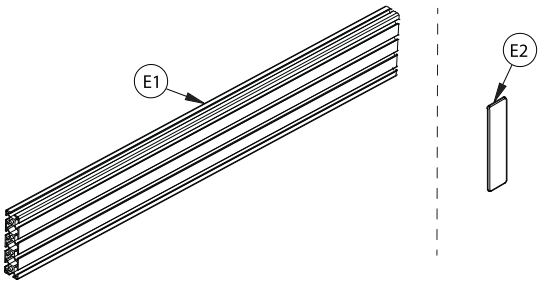

(F) ANGLE ADJUSTMENT CONNECTOR

BT8390-AAC

ITEM	PART NAME	QTY PER PACK
F1	ANGLE CONNECTOR	1
F2	M8 x 16mm SCREW	4
F3	M8 WASHER	12
F4	M8 x 12mm SCREW	8
F5	M8 SLIDING NUT	8
F6	5AF HEX KEY	1

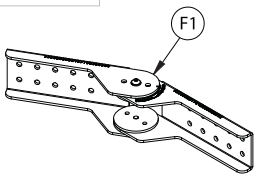

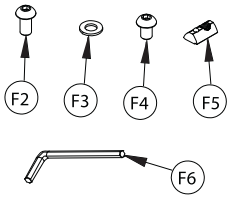

(G) *OPTIONAL* POLE EXTENSION KIT

BT7823

ITEM	PART NAME	QTY PER PACK
G1	INTERNAL JOINER	1
G2	M10 x 12mm SCREW	6
G3	6AF HEX KEY	1

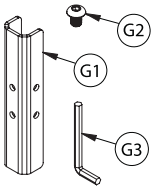

BT7824

ITEM	PART NAME	QTY PER PACK
G1	EXTERNAL JOINER	1
G2	M8 GRUB SCREW	16
G3	M8 x 60mm SCREW	2
G4	M8 x 12mm SCREW	2
G5	4AF HEX KEY	1
G6	5AF HEX KEY	1

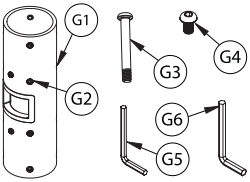

(H) INTERFACE KIT

ITEM	PART NAME	QTY PER PACK
H1	SCREEN INTERFACE ARM - LEFT	1
H2	SCREEN INTERFACE ARM - RIGHT	1
H3	M6 x 8mm HEX SCREW**	4
H4	4AF HEX KEY**	1
H5	5AF LONG HEX KEY	1
	SCREEN FIXING KIT	
A	M4 x 12mm SCREW*	4
B	M4 x 25mm SCREW*	4
C	M4 x 40mm SCREW*	4
D	M6 x 16mm SCREW	4
E	M6 x 25mm SCREW	4
F	M6 x 40mm SCREW	4
G	M8 x 16mm SCREW	4
H	M8 x 25mm SCREW	4
I	M8 x 40mm SCREW	4
J	MULTIWASHER*	4
K	5mm SPACER	4
L	13mm SPACER	4
M	24mm SPACER	4
N	M6 WASHER***	4

* Not included with the BT8390-VESA400MAF
** Not included with the BT8390-VESA400MAF, BT8390-VESA200F or BT8390-VESA400F
*** Only supplied with the BT8390-VESA400MAF

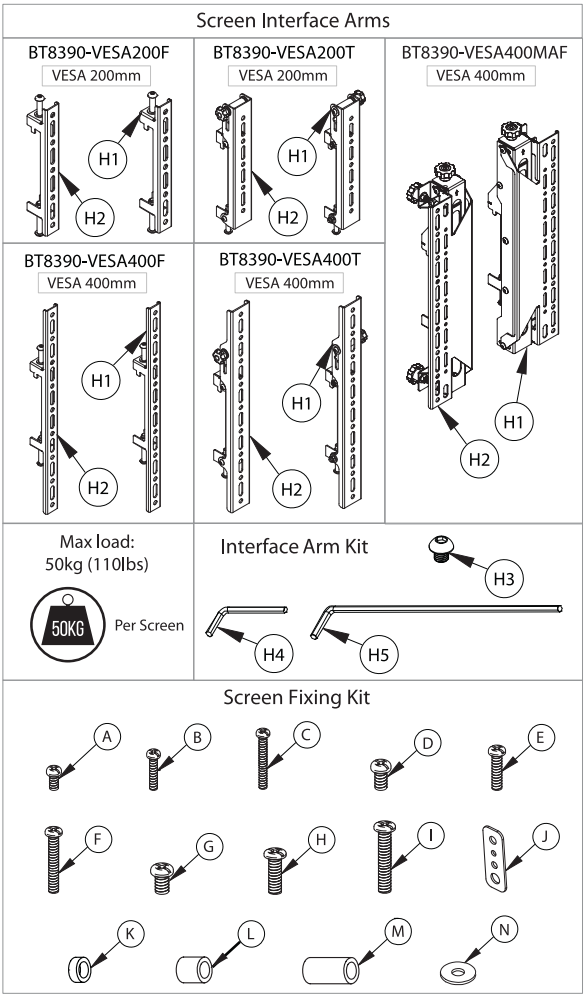

(I) *OPTIONAL* INTERFACE ADAPTOR ARMS

BT7564	BT7565	BT7566
VESA 600mm	VESA 800mm	VESA 900mm

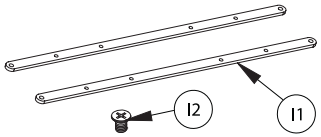

ITEM	PART NAME	QTY PER PACK
I1	ADAPTOR ARMS	2
I2	M8 x 12mm SCREW	4

Please refer to individual parts list for more information

TYPICAL INSTALLATIONS

3 x 2 Videowall installation with VESA 400 Micro-Adjustment arms

INSTALLATION TOOLS REQUIRED

Drill

Pencil

Crosshead screwdriver

Level *(Optional)*

OPTIONAL **COMBINING THE EXTENSION POLES**

BT7823 **INTERNAL POLE JOINER**

i. Insert *item G1* into the bottom *of item B1*, lining up the top screw holes on *item G1* with the holes on the bottom of the pole.
ii. Insert *item G2* through the holes in the pole into *item G1*.
iii. Slide *item B1* onto the bottom of *item G1* and align the bottom screw holes on *item G1* with the holes on the pole.
iv. Insert *item G2* through the pole holes.

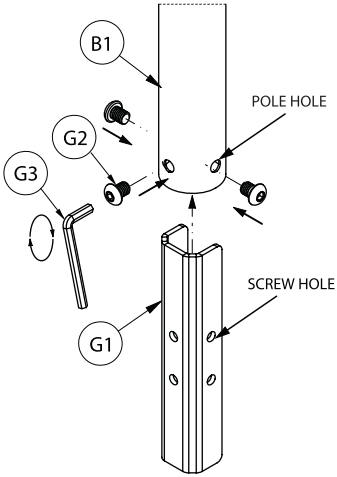

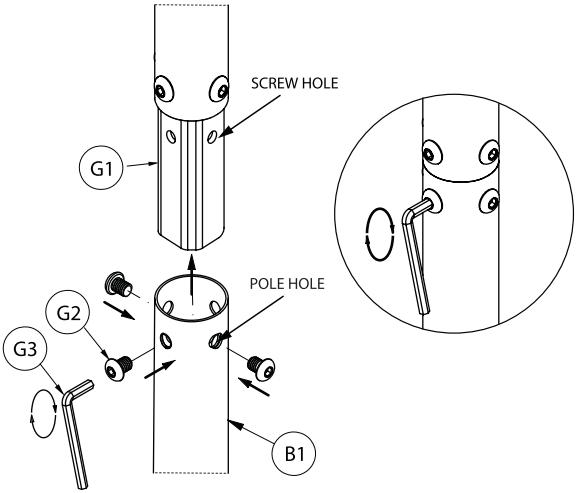

BT7824 **EXTERNAL POLE JOINER**

i. Insert *item B1* into the top *of item G1*, lining up the top screw hole with the hole in the pole.
ii. Insert *item G3* or *item G4* through the top screw hole.
Note: *Item G3* can be replaced with *item G4* to prevent cables being obstructed.
iii. Insert *item B1* into the bottom of *item G1* and align the bottom screw hole with the pole hole.
iv. Insert *item G3* or *item G4* through the bottom screw hole.
v. Tighten *item G2* onto both poles.

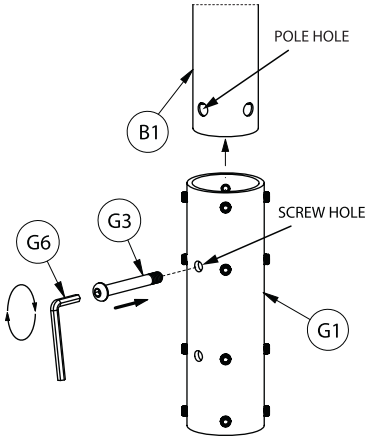

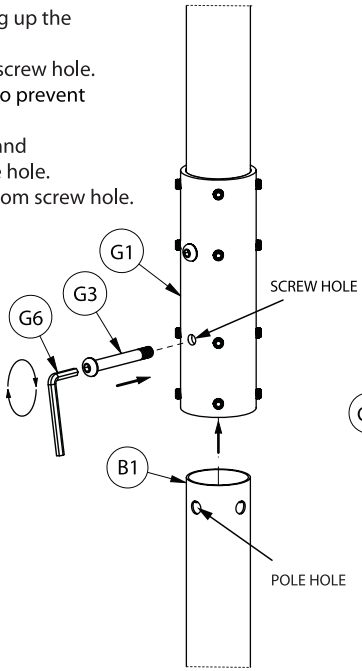

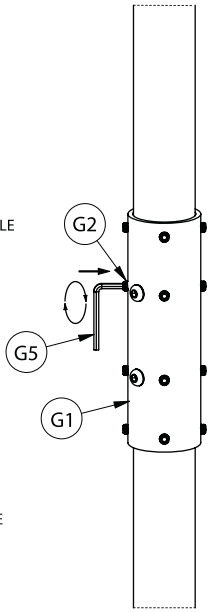

INSTALLATION INSTRUCTIONS

1. ASSEMBLE COLLARS ONTO RAILS

i. Attach *item C1* onto *item D1*.
Note: Ensure *items C2* are positioned on the back of *item C1*.

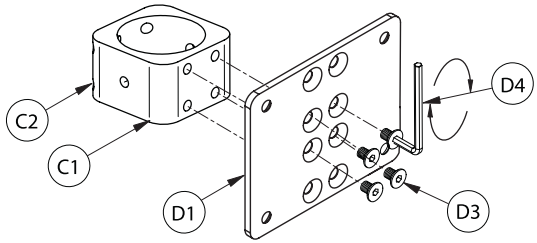

Assembly using 2 single collars

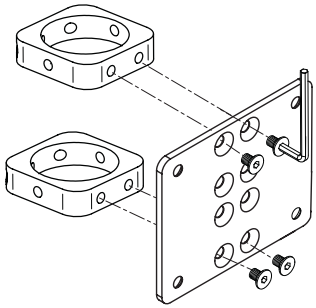

ii. Insert 2x *item D2* into the top channel of *item E1* and 2x *item D2* in the bottom channel.

Using a single ceiling mount.
Position collar fixing plate centrally on the rail.

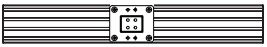

Using two or more ceiling mounts.
Measure equal distances between the collar fixing plates on the rail.

Note: *The Max. distance apart for ceiling mount 1500mm*

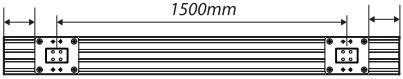

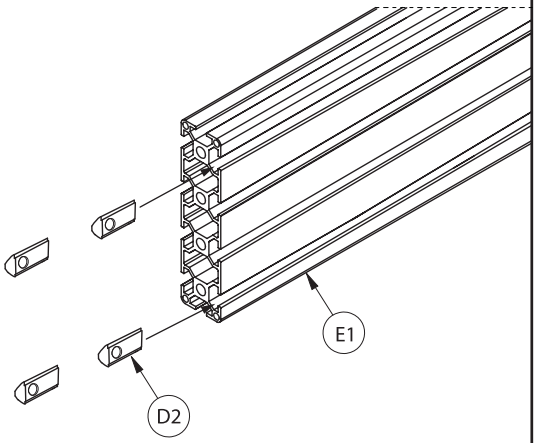

iii. Fix *item D1* to *item E1* by fastening *item D3* into *item D2*.

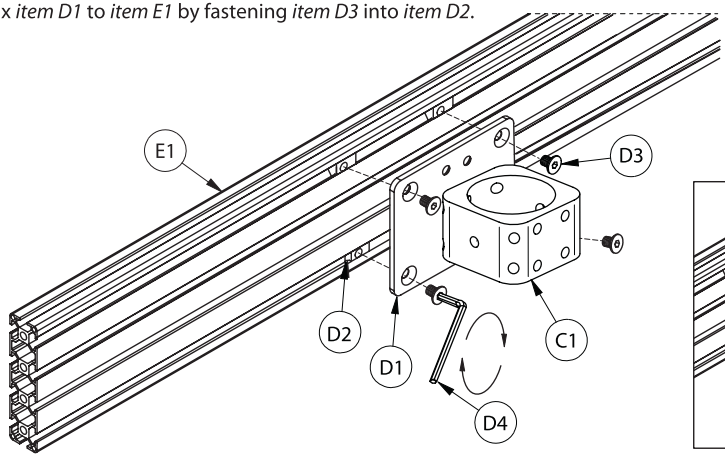

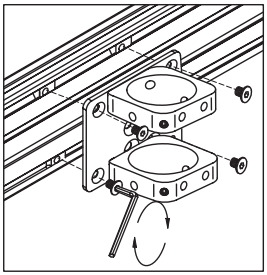

2. FIX ANGLE CONNECTORS TO MOUNTING RAILS

i. Insert 4 x *item F5* into the end of *item E1* (2 in each centre channel).

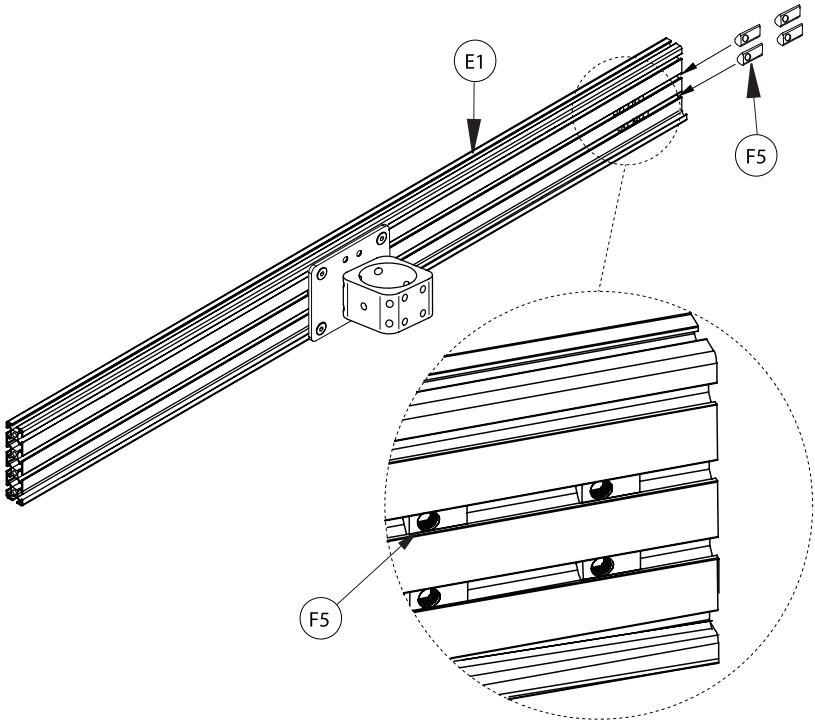

ii. Assemble *items F2* & *F3* to *item F1*.
Note: Do not fully tighten the screws and washers.

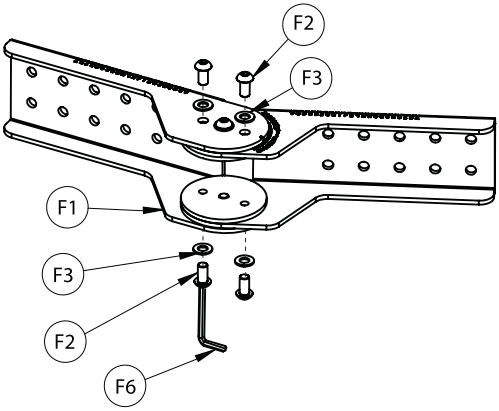

iii. With the rails flat on the floor, connect *item F1* to 2x *item E1* using *items F3, F4 & F5*.
Note: Make sure all rails are fixed using the same positions on *item F1**.

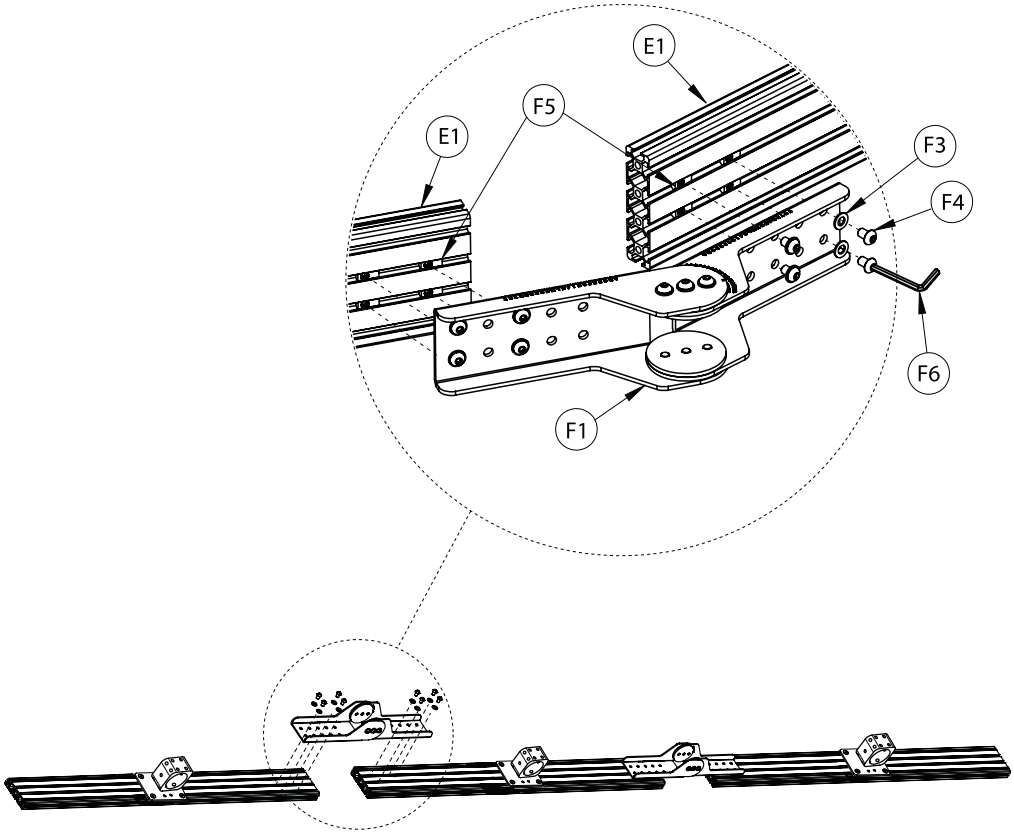

***Note:** The rail fixing positions used on *item F1* are dependent on the size of screens being used.

For help with the rail fixing postion contact:
technical@btechavmounts.co.uk

Please state the screen size, screen depth, rail length and curve angle of the installation.

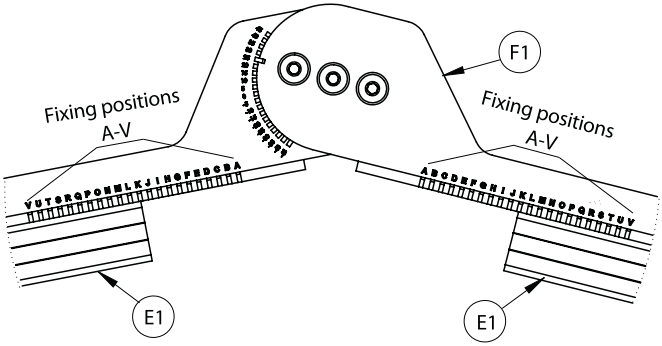

3. FIX ANGLE

Set the angle required on *item F1* and fully tighten all screws using *item F6*.

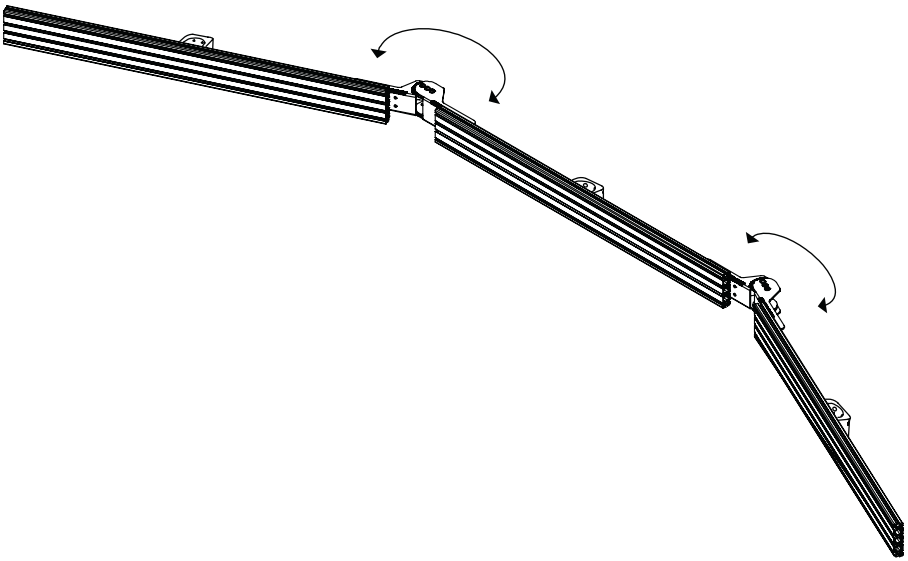

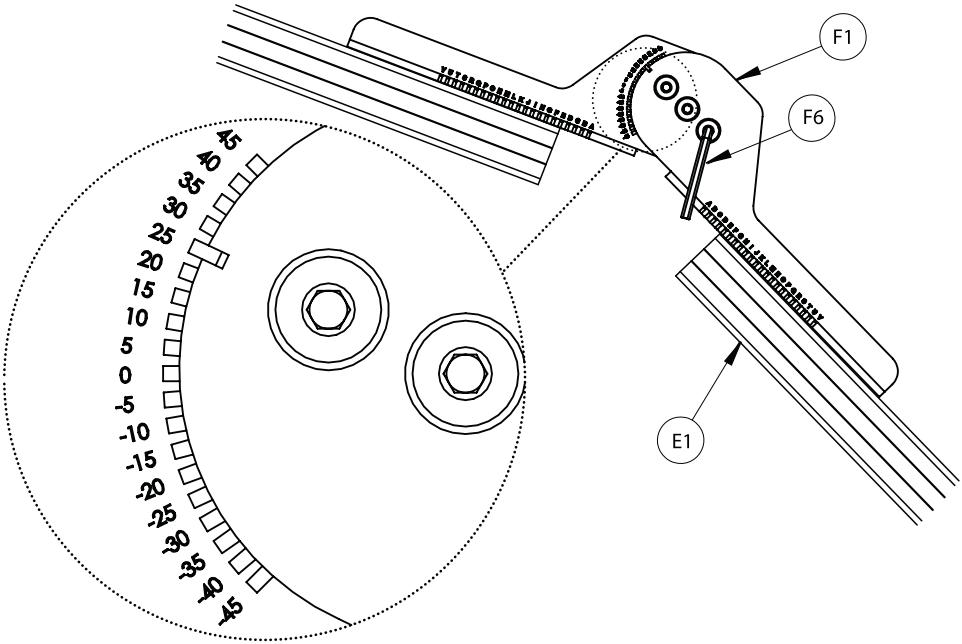

4. MOUNT CEILING PLATES

Fix *item A1* to the ceiling using suitable fixings *(not supplied)*.

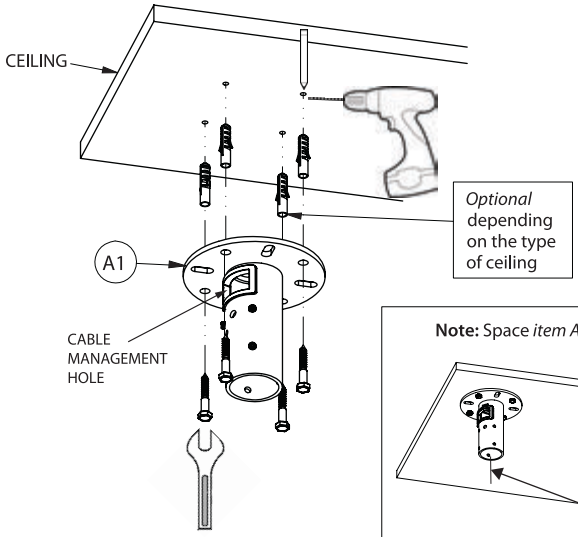

CEILING PLATE FIXING DIMENSIONS

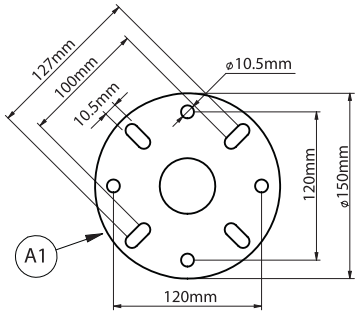

Note: Space *item A1* the same distance apart as *item C1* on *item E1*.

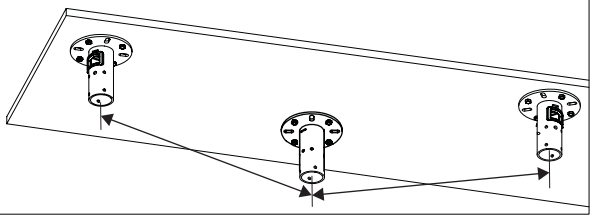

5. ATTACH POLE TO CEILING PLATE

i. Insert *item B1* into *item A1* and secure in place using *item A2*.

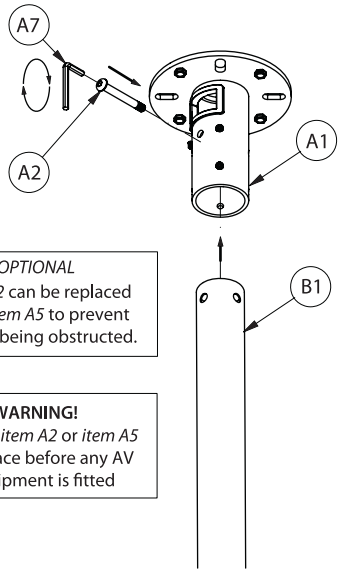

OPTIONAL
Item A2 can be replaced with *item A5* to prevent cables being obstructed.

WARNING!
Ensure *item A2* or *item A5* is in place before any AV equipment is fitted

ii. Tighten *item A3* using *item A6*.

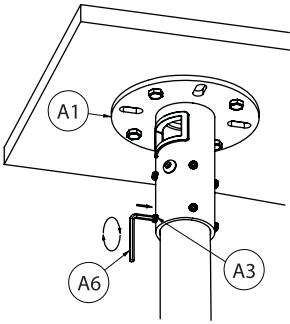

Note: The angle of the pole can be adjusted using *item A3*.

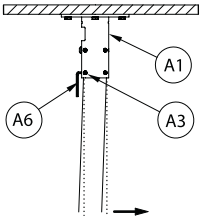

iii. Attach *item A4* to *item A1*.

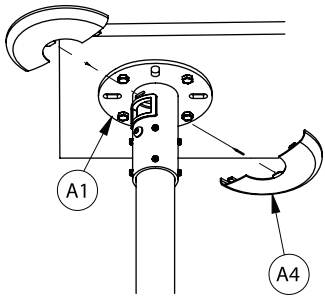

6. FIX RAILS TO POLES

i. Using *item C1*, slide *item E1* up onto *item B1* and position the rail for the top row of screens.
ii. Tighten *items C2* on the back of *item C1* to secure rail to pole.
iii. Mount the 2nd rail onto the poles.
Note: Use the height of the screen to set the distance between *items E1*

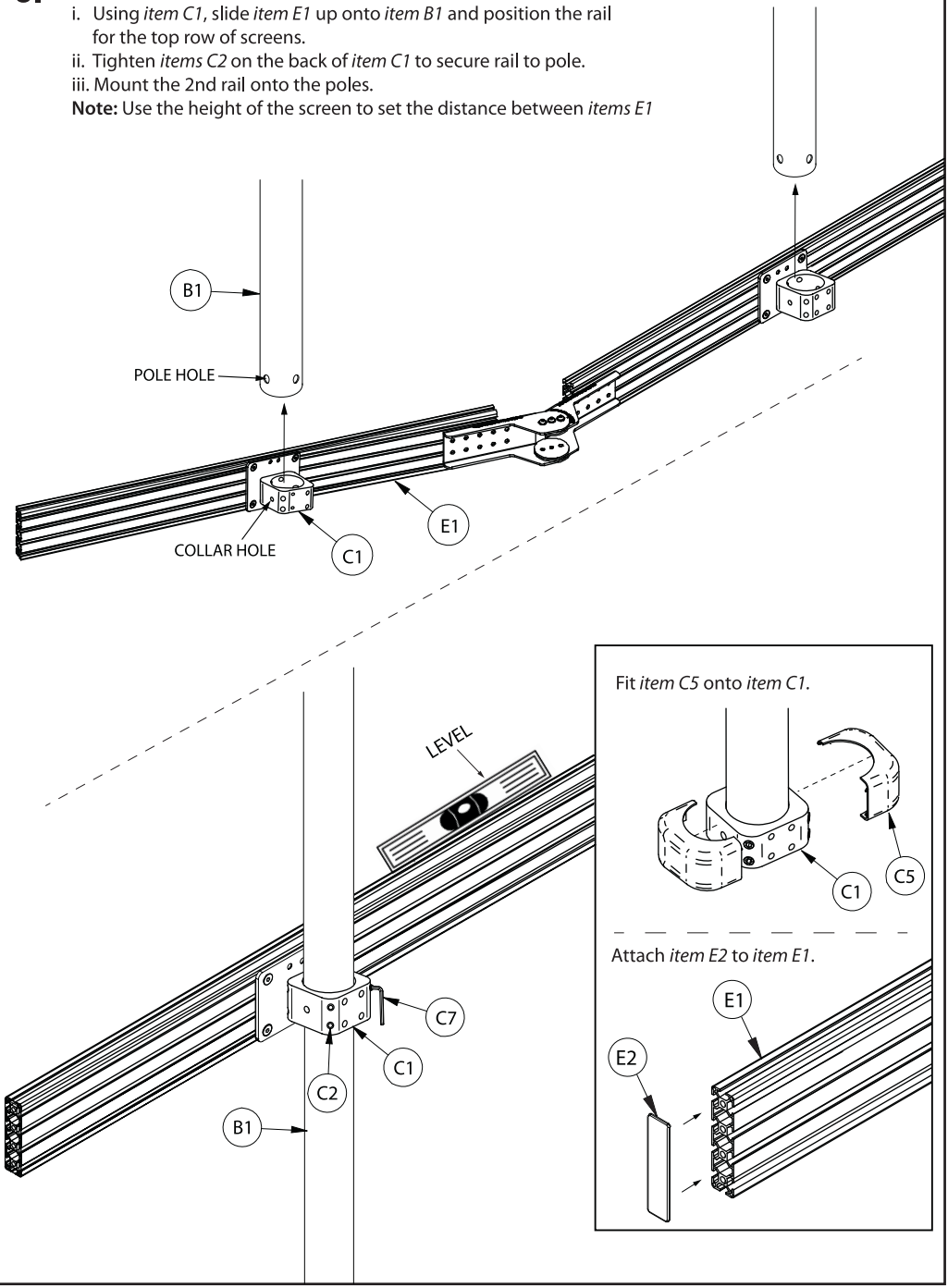

iv Slide the bottom rail onto *item B1* and align the pole hole with the collar hole. Fasten *items C2* on the back of *item C1*.

v. Insert *item C3* through *item C1 & B1,* securing the rail to the pole.

vi. Attach *item E2* to the ends of *item E1* and *item C5* onto *item C1*.

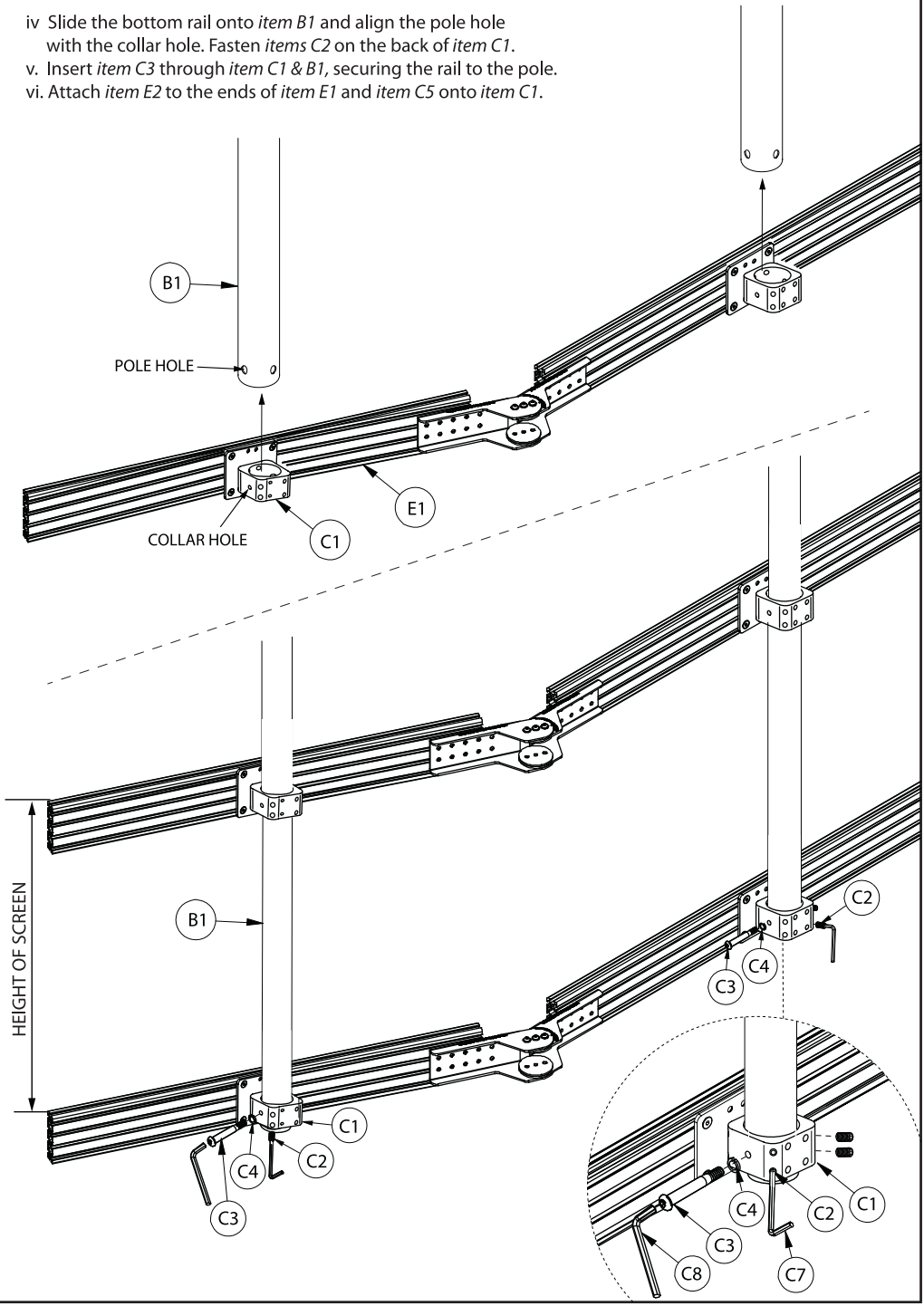

7. ATTACH INTERFACE ARMS TO SCREEN

Fix *items H1* & H2 to the rear of the screen using *items A - N*.

Note: Ensure the arms are facing the correct way round and the same holes are used on both arms.

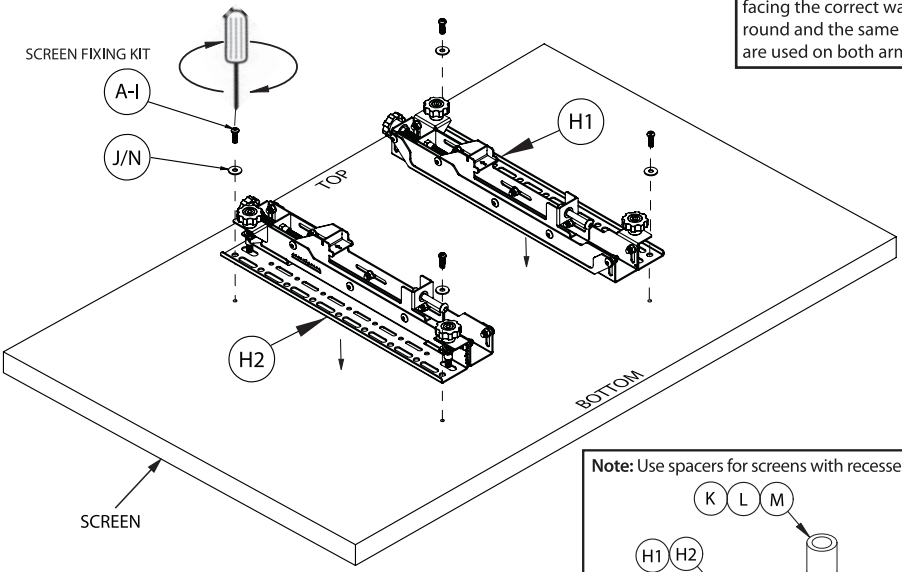

Note: Use spacers for screens with recessed fixings

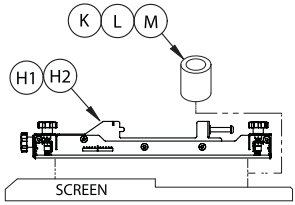

OPTIONAL **ADAPTOR ARMS**

ATTACH ADAPTOR ARMS TO INTERFACE ARMS

i. Use *item I2* to fix *item I1* to *items H1 & H2*.
ii. Attach *item I1* to the screen using the screen fixing kit.

ASSEMBLY FOR PORTRAIT ORIENTATION

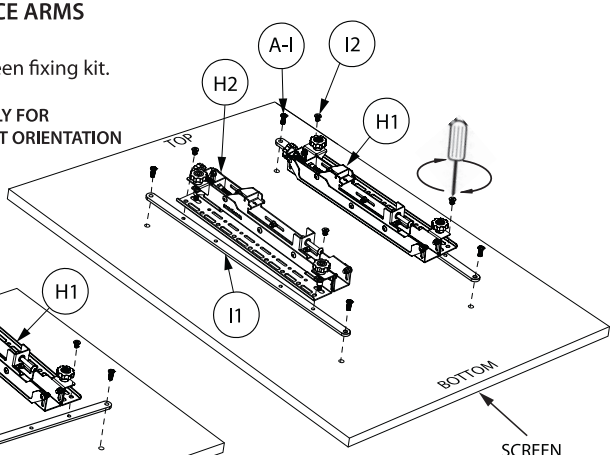

ASSEMBLY FOR LANDSCAPE ORIENTATION

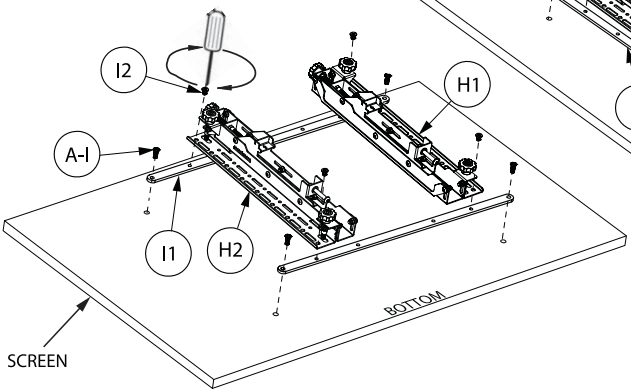

8. HOOK SCREEN ONTO RAIL

i. Hook the first screen onto the bottom *item B1*.

ii. Using a level, align the screen to the floor using the Y axis adjustment knob on *items H1 & H2**

*Only available with Micro-adjustment arms - *See page 17*.

For Fixed and Tilt arms use the height adjustment screws on top of *items H1 & H2 -See below*

iii. Once the first screen is in position, mount the remaining screens onto the rails.

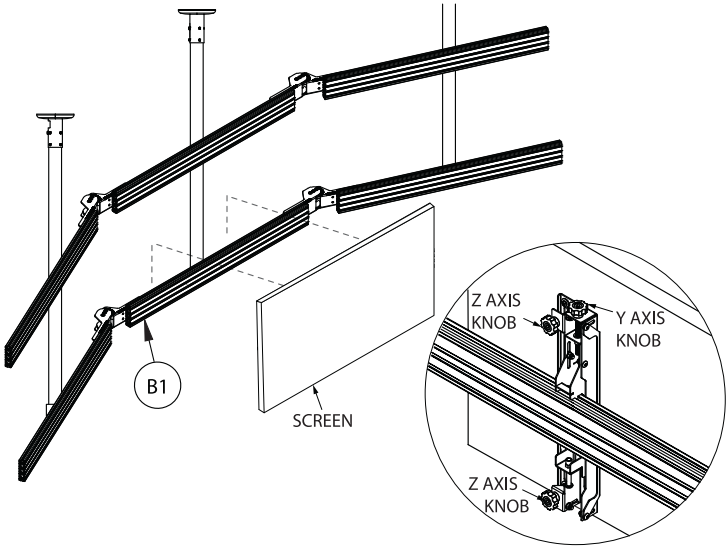

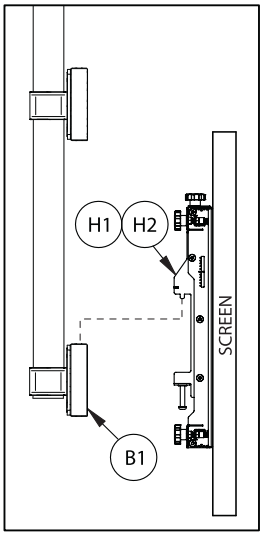

Note: If mounting 3 or more screens across, mount the first screen centrally onto the bottom rail.

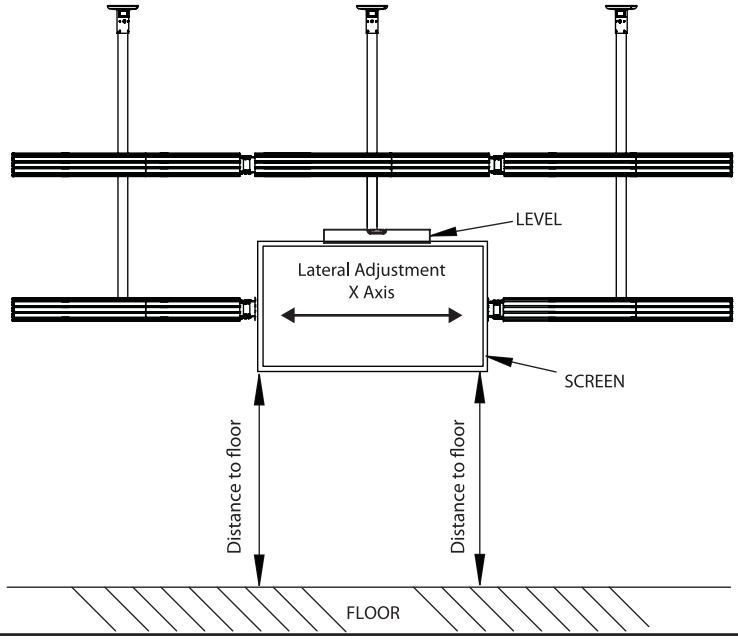

SCREEN LEVELLING (FIXED AND TILT ARMS*)

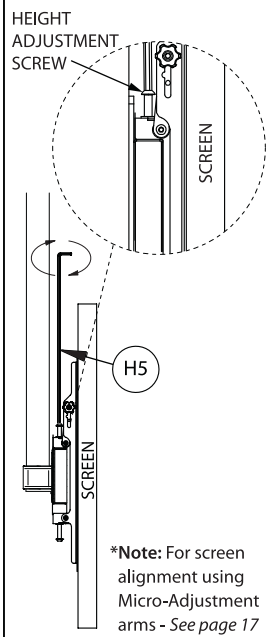

***Note:** For screen alignment using Micro-Adjustment arms - *See page 17*

9. HOOK THE REMAINING SCREENS ONTO THE RAILS

Starting from the bottom rail, hook the remaining screens onto rails using a plumb to align. After mounting each screen use the Y & Z micro-adjustment knobs on *items H1 & H2** to level and align screens. **Note:** A 1mm gap between screens should be maintained.

Use **Depth Adjustment*** (Z axis knobs) to align front of screens

Use **Lateral Adjustment** to align sides of screens

Use **Height Adjustment*** (Y axis knobs) to align bottom/top of screens

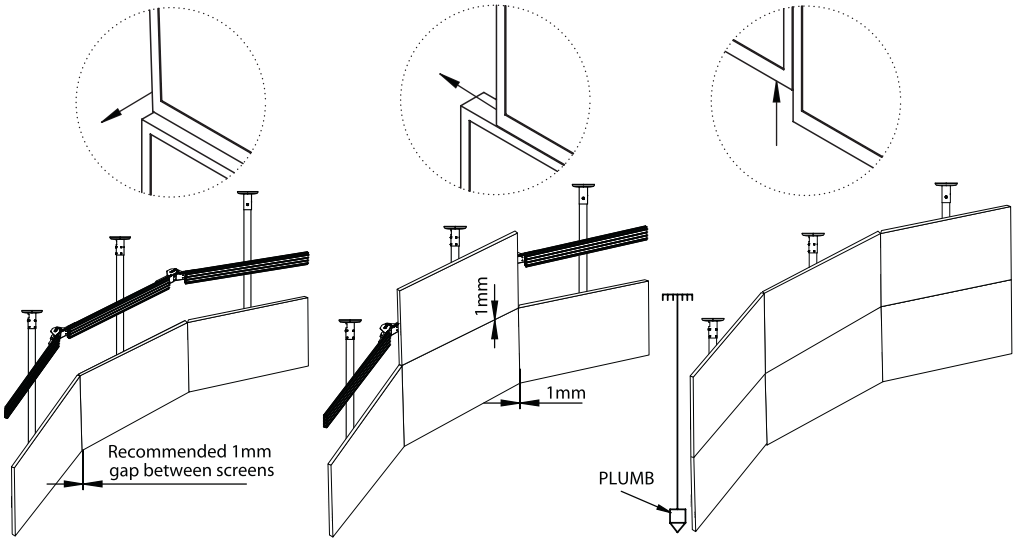

*Only available when using the *BT8390-VESA400MAF* interface arms. To level the rows of screens using the fixed or tilt interface arms, use the height adjustment screws on top of the arms before mounting the next row of screens - *see page 16*

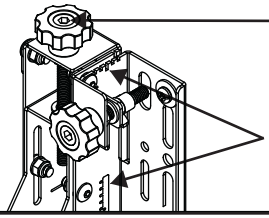

Adjustment knobs are also compatible with 6mm allen key

Adjustment lines to help with accurate Y & Z axis screen alignment

Total Y axis adjustment is +/-25mm
Total Z axis adjustment is 20mm

Note: Light pressure in the desired direction of travel will assist in the adjustment of knobs when using heavier screens

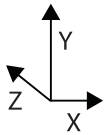

10. SECURE SCREENS

Once screens are aligned, tighten the safety screws on the bottom of *items H1 & H 2*.

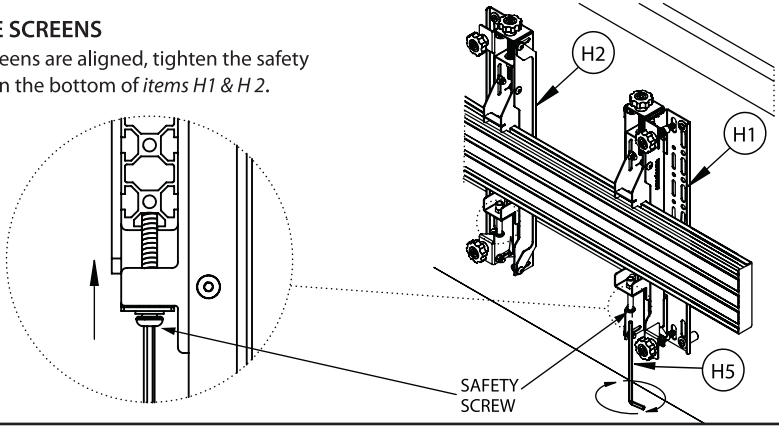

WARNING! Contact a professional AV installer or other suitably qualified person for any further operation or removal of equipment after installation

BT8343 **DIMENSIONS**

PLEASE KEEP THIS FOR FUTURE REFERENCE

Depending on installation requirements, the BT8343 Video Wall Ceiling Mounting Kit will feature a selection of the following products.

CEILING MOUNT

BT7822

REAR VIEW

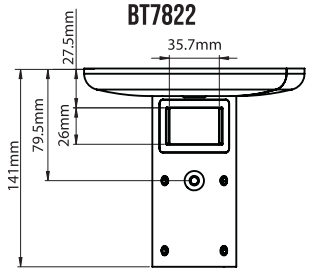

TOP VIEW

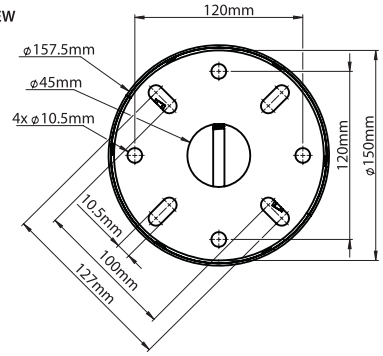

EXTENSION POLE

BT7850

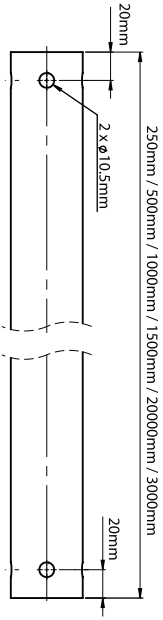

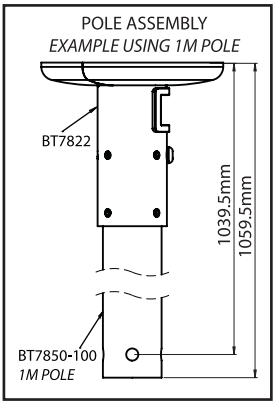

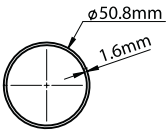

INTERFACE ARMS

BT8390-VESA200F

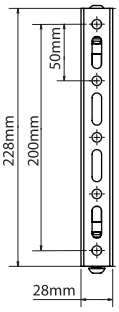

BT8390-VESA200T

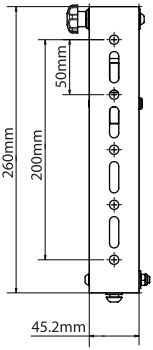

BT8390-VESA400F

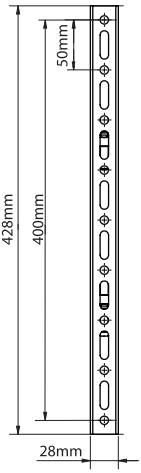

BT8390-VESA400T

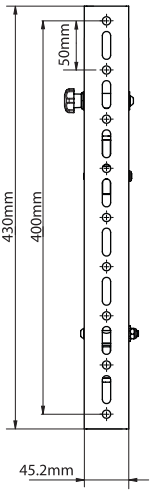

BT8390-VESA400MAF

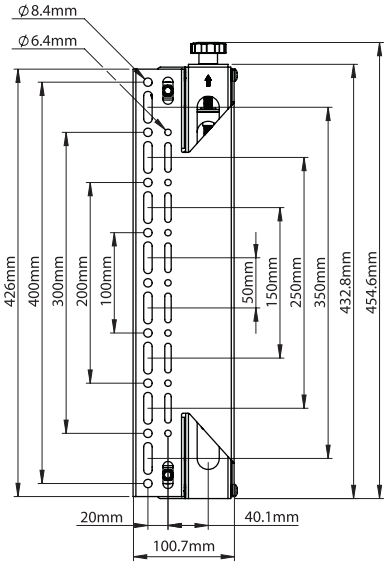

BT8343 **DIMENSIONS**

PLEASE KEEP THIS FOR FUTURE REFERENCE

Depending on installation requirements, the BT8343 Video Wall Ceiling Mounting Kit will feature a selection of the following products.

MOUNTING RAILS

BT8390-050

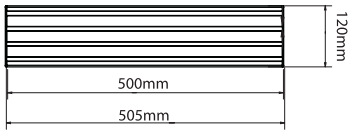

BT8390-070

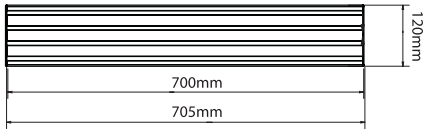

BT8390-150

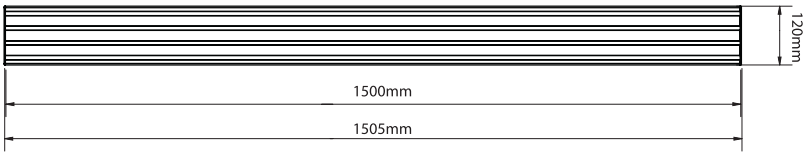

BT8390-175

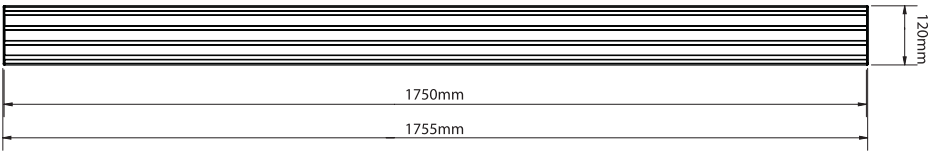

BT8390-200

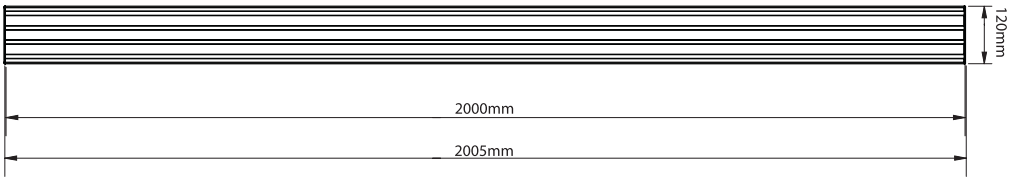

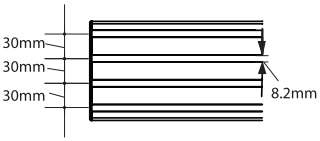

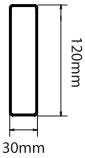

THESE INSTRUCTIONS ARE INTENDED AS A GUIDE ONLY AND B-TECH ACCEPTS NO LIABILITY FOR THE ACCURACY OF THE INFORMATION CONTAINED IN THIS DOCUMENT.

B-TECH AV MOUNTS

B-TECH AV MOUNTS

CONTACT:
info@btechavmounts.com

©2022 B-Tech International Design and Manufacturing Ltd. All rights reserved.
B-Tech AV Mounts is a division of B-Tech International Design and Manufacturing Ltd.
B-Tech AV Mounts and the B-Tech logo are registered trade marks.
All other brands and product names are trademarks of their respective owners.
Photographs are for illustrative purposes only. E&OE.

Manufactured by:
B-TECH INTERNATIONAL DESIGN & MANUFACTURING LTD
Unit 26, 22/F Metro Centre II, 21 Lam Ling St., Kowloon Bay, Kowloon, Hong Kong

AMA-BT8343-V1.2-0922-BTECH MADE IN VIETNAM